Signs A and B

City of Millington
SIGN PERMIT APPLICATION

$1.00 Per Square Foot
Permit fee – Minimum $50.00

NO WORK MAY BEGIN UNTIL PERMIT HAS BEEN ISSUED.
(FAILURE TO COMPLY WILL RESULT IN DOUBLED PERMIT FEE.)

DATE: 6/21/16

OWNER OF SIGN: FEE: $136.00

BUSINESS NAME: Aspen Dental
CONTACT NAME: Jill Hopkins
PARCEL ADDRESS: 8750 Highway 51 MILLINGTON, TN. 38053
PHONE #: 843-576-3241 FAX #: 843-576-7241

PARCEL OWNER		SIGN CONTRACTOR
Ryan Commercial Properties	NAME	Anchor Sign, Inc.
Gil Ryan	CONTACT NAME	Jill Hopkins/jhopkins@anchorsign.com
10215 Highway 194	ADDRESS	2200 Discher Avenue
Oakland, TN 38060	CITY, ST., ZIP	Charleston, SC 29405
901-465-9056	PHONE #	843-576-3241
	FAX #	843-576-7241
	MILL. BUSS. LIC.	

PERMIT INFO: ZONE: PC STORE or PARCEL FRONT FOOTAGE: Front: 42.17'; Side: 82.5'

CURRENT SIGN: N/A

PROPOSED SIGN: Front Northwest elevation sign A-67.99 sq.ft. and Side Northeast elevation sign B-67.99 sq.ft.

CURRENT SIGN AREA: N/A SQ. FT. TOTAL SIGN AREA: N/A SQ. FT.

PROPOSED SIGN AREA: Sign A: 67.99 sq.ft; Sign B: 67.99 Sq.ft. SQ. FT. SQ. FT. ALLOWED: Sign A: 63.26 sq.ft. Sign B: 123.75 sq.ft. SQ. FT.

DIMENSIONS OF SIGN: Sign A: 19.20' x 3.54' and Sign B: 19.20' x 3.54'

DESCRIPTION OF SIGN: (1) Aspen Dental internally illuminated individual channel letters on the Front Northwest elevation and (1) Aspen Dental internally illuminated individual channel letters on the Side Northeast elevation.

DRAWING SUBMITTED WITH APPLICATION ☑ (SCALE 1"= 10 FEET)

I am aware and in agreement with the application for the above requested sign. I am aware that the responsibility for conformance with the provisions of the Millington Zoning Ordinance shall revert to me if the applicant should no longer be located at the above address. This responsibility may include removal of the sign as required by the zoning ordinance.

SIGNATURE OF **OWNER OF SIGN:** _____

SIGNATURE OF **OWNER OF PREMISES** WHERE SIGN IS LOCATED: _____
(Property Owner or Authorized Agent)

APPLICATION APPROVED BY _____ DATE _____

Awnings

City of Millington
SIGN PERMIT APPLICATION

$1.00 Per Square Foot
Permit fee – Minimum $50.00

NO WORK MAY BEGIN UNTIL PERMIT HAS BEEN ISSUED.
(FAILURE TO COMPLY WILL RESULT IN DOUBLED PERMIT FEE.)

DATE: 6/21/16

OWNER OF SIGN: FEE: $136.00

BUSINESS NAME: Aspen Dental
CONTACT NAME: Jill Hopkins
PARCEL ADDRESS: 8750 Highway 51 MILLINGTON, TN. 38053
PHONE #: 843-576-3241 FAX #: 843-576-7241

PARCEL OWNER		SIGN CONTRACTOR
Ryan Commercial Properties	NAME	Anchor Sign, Inc.
Gil Ryan	CONTACT NAME	Jill Hopkins/jhopkins@anchorsign.com
10215 Highway 194	ADDRESS	2200 Discher Avenue
Oakland, TN 38060	CITY, ST., ZIP	Charleston, SC 29405
901-465-9056	PHONE #	843-576-3241
	FAX #	843-576-7241
	MILL. BUSS. LIC.	

PERMIT INFO: ZONE: PC STORE or PARCEL FRONT FOOTAGE: Front: 42.17'; Side: 82.5'

CURRENT SIGN: N/A

PROPOSED SIGN: (3) awnings on the Front Northwest elevation, (4) awnings on the Side Northeast elevation, and (1) awning on the Rear Southeast elevation.

CURRENT SIGN AREA: N/A SQ. FT. TOTAL SIGN AREA: N/A SQ. FT.
PROPOSED SIGN AREA: SQ. FT. SQ. FT. ALLOWED: SQ. FT.

DIMENSIONS OF SIGN: A: (1) 54" x 246" & (2) 54" x 56"; B: (1) 54" x 336" & (3) 54" x 98"; C: (1) 54" x 42"

DESCRIPTION OF SIGN: Total of (8) stapled to the frame shed style awnings using Weathermax FR 80 Pacific Blue Fire Retardant material.

DRAWING SUBMITTED WITH APPLICATION ☑ (SCALE 1"= 10 FEET)

I am aware and in agreement with the application for the above requested sign. I am aware that the responsibility for conformance with the provisions of the Millington Zoning Ordinance shall revert to me if the applicant should no longer be located at the above address. This responsibility may include removal of the sign as required by the zoning ordinance.

SIGNATURE OF **OWNER OF SIGN:**

SIGNATURE OF **OWNER OF PREMISES** WHERE SIGN IS LOCATED:
(Property Owner or Authorized Agent)

APPLICATION APPROVED BY _____ DATE _____

Ryan
COMMERCIAL PROPERTIES
Commercial Real Estate Services & Development

June 23, 2016

City of Millington, TN
7930 Nelson Street
Millington, TN 38053

Re: Aspen Dental (AN-A21793)
8750 Highway 51
Millington, TN 38053

To Whom It May Concern:

This letter enables Anchor Sign, Inc. and its representatives to be an authorized agent of the property owner, giving them permission to obtain permits and install signage for the project location listed above.

Thank you in advance for all your cooperation.

Sincerely,

(Signature)

Gil M. Ryan Managing Member
(Printed Name/Title)

10215 Highway 194 • Oakland, Tennessee 38060
Phone: 901-465-9056 • Fax: 901-466-1568 • E-Mail: ryancommercial@aol.com

AnchorSign

June 24, 2016

City of Millington, TN
Attn: Christy Roland
Permit Technician
7930 Nelson Street
Millington, TN 38053
Phone: 901-873-3341

Dear Christy:

In regards to:

Aspen Dental (AN-A21793)
8750 Highway 51
Millington, TN 38053

Enclosed please find a check for $136.00 for permit fees, a letter of authorization, a sign permit application for the signs, a sign application for the awnings and (1) set of detailed drawings for proposed signage and awnings at the above location.

Please do not hesitate to contact me right away if you require any further documentation or if you have any questions and with any fees that are due.

Sincerely,

Jill Hopkins
Permit Coordinator
Toll-Free: 800-213-3331
Direct: 843-576-3241
Fax: 843-576-7241
Email: jhopkins@anchorsign.com

SIGN A	36" Aspen Dental
Type:	Individual Channel Letters
Illumination:	Internally Illuminated LED
Square Footage:	67.99
To Grade:	Top of sign to grade = 18'-10 3/4" Bottom of sign to grade = 15'- 4 1/4"

Awnings A	Stapled to Frame Awning
Type:	54" Shed Style
Illumination:	Non-Illuminated
To Grade:	Bottom of Awning to Grade = 8'-5 1/2"

Front Elevation (Northwest)

Scale: 3/16" = 1'-0"

Allowable Square Footage:	66.00
1.5 sf per linear foot of frontage, NTE 150 sf	
Actual Square Footage this Elevation:	64.91

AspenDental

Client:	Aspen Dental
Site #:	AN-A21793
Address:	8750 Highway 51
	Millington, TN 38053
	Millington Farms

REVISION INFO		
03/25/2016	Variance Rendering	GC
03/28/2016	Added Additional Awnings to Side Elevation	SD
06/16/2016	Updated for Permitting	SD

This rendering is the property of Anchor Sign, Inc. It is for the exclusive use of Anchor Sign, Inc. and the party which requested the rendering. It is an unpublished original drawing not to be distributed, reproduced or exhibited without the consent of Anchor Sign, Inc. Please contact your account manager with questions regarding this statement.

AnchorSign
1.800.213.3331

SIGN A	36" Aspen Dental
Type:	Individual Channel Letters
Illumination:	Internally Illuminated LED
Square Footage:	67.99
To Grade:	Top of sign to grade = 18'-10 3/4" Bottom of sign to grade = 15'- 4 1/4"

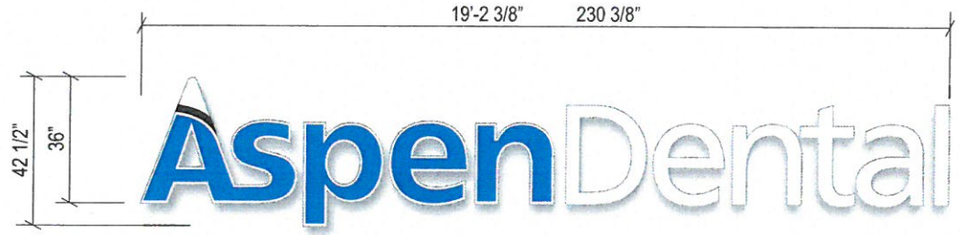

Sign Layout Detail

Scale: 1/4" = 1'-0"

*Note for letter "A":

*Aluminum bridge to separate upper and lower sections of the "A"

Electrical Detail:

White LEDs
(2) 60w Transformer
Total Amps: 1.7
(1) 20 amp 120V Circuit Req.

UL LISTED

General Notes:

This sign is to be installed in accordance with the requirements of Article 600 of the National Electrical Code.

1) Grounded and bonded per NEC 600.7/NEC 250
2) Existing branch circuit in compliance with NEC 600.5, not to exceed 20 amps
3) Sign is to be UL listed per NEC 600.3
4) UL disconnect switch per NEC 600.6- required per sign component before leaving manufacturer*
*For multiple signs, a disconnect is permitted but not required for each section

Specifications: Channel Letters

1. Existing Facade: EIFS/Plywood/Metal Studs
2. 0.040" Aluminum letter returns painted to match Black
3. 0.125" x 1" trim cap to match White Jewelite
4. 3mm Signabond Lite composite backs
   (interior of sign can painted ultra white for maximum illumination)
5. White LEDs
6. 3/16" White Acrylic faces with first surface applied vinyl
   "Aspen": Arlon Bright Blue 2500-67 with White outline border
7. Waterproof disconnect switch per NEC 600-6
8. Primary electrical feed
9. Transformers
10. #12 Sheet metal screws

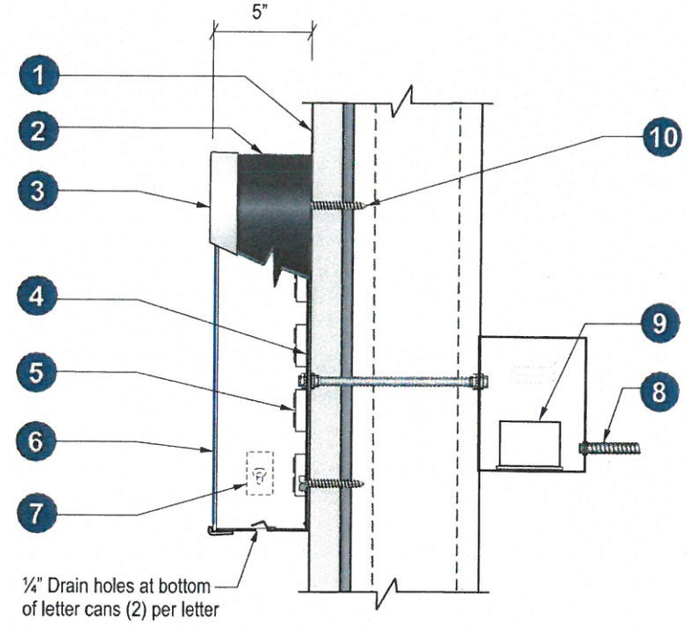

Section @ LED Channel Letter

Front-Lit (Remote) Scale: N.T.S.

AspenDental

Client:	Aspen Dental
Site #:	AN-A21793
Address:	8750 Highway 51
	Millington, TN 38053
	Millington Farms

REVISION INFO			
	03/25/2016	Variance Rendering	GC
	03/28/2016	Added Additional Awnings to Side Elevation	SD
	06/16/2016	Updated for Permitting	SD

This rendering is the property of Anchor Sign, Inc. It is for the exclusive use of Anchor Sign, Inc. and the party which requested the rendering. It is an unpublished original drawing not to be distributed, reproduced or exhibited without the consent of Anchor Sign, Inc. Please contact your account manager with questions regarding this statement.

AnchorSign
1.800.213.3331

Awnings A	Stapled to Frame Awning
Type:	54" Shed Style
Illumination:	Non-Illuminated
To Grade:	Bottom of Awning to Grade = 8'-5 1/2"

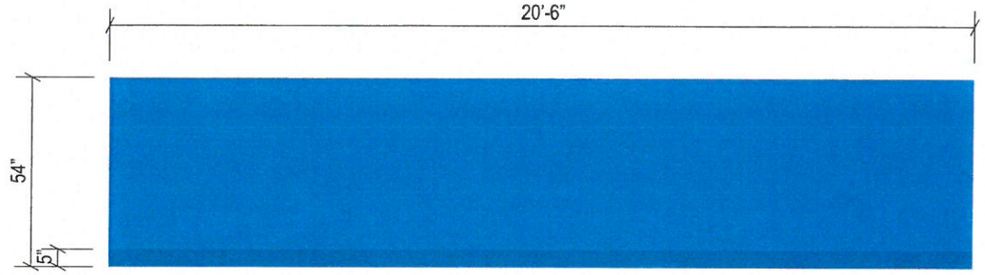

A1

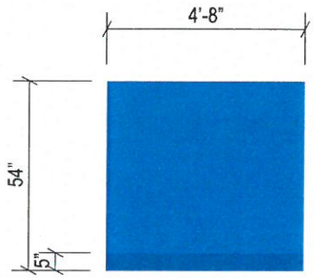

A2 & A3

Awning Layout Details

Scale: 1/4" = 1'-0"

Typical Support Detail:

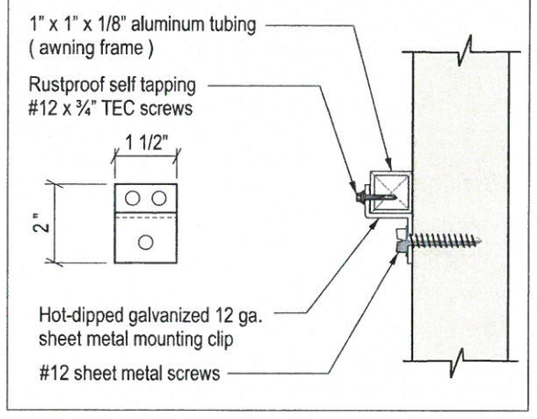

Specifications:

1. Existing Facade: EIFS/Plywood/Metal Studs
2. Awning Material: Weathermax FR 80 Pacific Blue (Fire Retardant)
3. 1" x 1" x 0.125" Aluminum square tubing frame painted to match mullions (wire brush all welds)
4. Closed End & Open Bottom
5. #12 Sheet metal screws

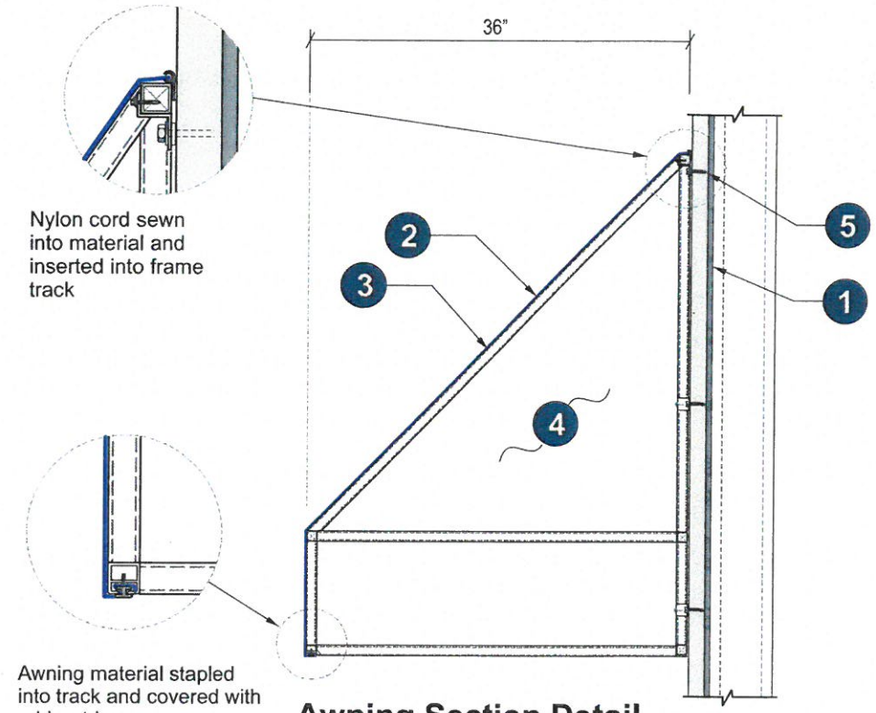

Awning Section Detail

Scale : N.T.S.

AspenDental

Client:	Aspen Dental
Site #:	AN-A21793
Address:	8750 Highway 51
	Millington, TN 38053
	Millington Farms

REVISION INFO		
03/25/2016	Variance Rendering	GC
03/28/2016	Added Additional Awnings to Side Elevation	SD
06/16/2016	Updated for Permitting	SD

This rendering is the property of Anchor Sign, Inc. It is for the exclusive use of Anchor Sign, Inc. and the party which requested the rendering. It is an unpublished original drawing not to be distributed, reproduced or exhibited without the consent of Anchor Sign, Inc. Please contact your account manager with questions regarding this statement.

AnchorSign
1.800.213.3331

SIGN B	36" Aspen Dental
Type:	Individual Channel Letters
Illumination:	Internally Illuminated LED
Square Footage:	67.99
To Grade:	Top of sign to grade = 18'-10" Bottom of sign to grade = 15'-3 1/2"

Awnings B	Stapled to Frame Awning
Type:	54" Shed Style
Illumination:	Non-Illuminated
To Grade:	Bottom of Awning to Grade = 8'-5 1/2"

Side Elevation (Northeast)

Scale: 1/8" = 1'-0"

Allowable Square Footage:	84.00
NTE 84 sf	
Actual Square Footage this Elevation:	79.90

AspenDental

Client:	Aspen Dental
Site #:	AN-A21793
Address:	8750 Highway 51
	Millington, TN 38053
	Millington Farms

REVISION INFO		
03/25/2016	Variance Rendering	GC
03/28/2016	Added Additional Awnings to Side Elevation	SD
06/16/2016	Updated for Permitting	SD

This rendering is the property of Anchor Sign, Inc. It is for the exclusive use of Anchor Sign, Inc. and the party which requested the rendering. It is an unpublished original drawing not to be distributed, reproduced or exhibited without the consent of Anchor Sign, Inc. Please contact your account manager with questions regarding this statement.

AnchorSign
1.800.213.3331

SIGN B	36" Aspen Dental
Type:	Individual Channel Letters
Illumination:	Internally Illuminated LED
Square Footage:	67.99
To Grade:	Top of sign to grade = 18'-10" Bottom of sign to grade = 15'-3 1/2"

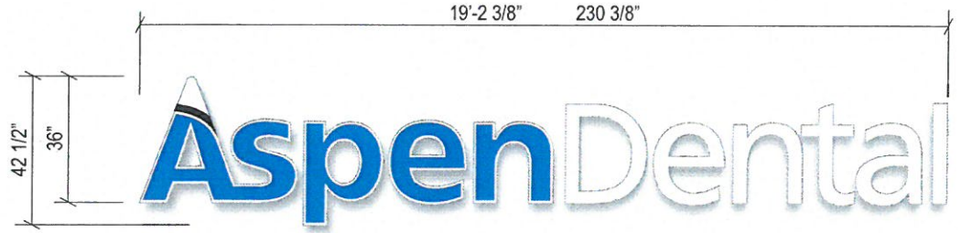

Sign Layout Detail

Scale: 1/4" = 1'-0"

*Note for letter "A":

*Aluminum bridge to separate upper and lower sections of the "A"

Electrical Detail:

White LEDs
(2) 60w Transformer
Total Amps: 1.7
(1) 20 amp 120V Circuit Req.

UL LISTED

General Notes:

This sign is to be installed in accordance with the requirements of Article 600 of the National Electrical Code.

1) Grounded and bonded per NEC 600.7/NEC 250
2) Existing branch circuit in compliance with NEC 600.5, not to exceed 20 amps
3) Sign is to be UL listed per NEC 600.3
4) UL disconnect switch per NEC 600.6- required per sign component before leaving manufacturer*
*For multiple signs, a disconnect is permitted but not required for each section

Specifications: Channel Letters

1. Existing Facade: EIFS/Plywood/Metal Studs
2. 0.040" Aluminum letter returns painted to match Black
3. 0.125" x 1" trim cap to match White Jewelite
4. 3mm Signabond Lite composite backs
   (interior of sign can painted ultra white for maximum illumination)
5. White LEDs
6. 3/16" White Acrylic faces with first surface applied vinyl
   "Aspen": Arlon Bright Blue 2500-67 with White outline border
7. Waterproof disconnect switch per NEC 600-6
8. Primary electrical feed
9. Transformers
10. #12 Sheet metal screws

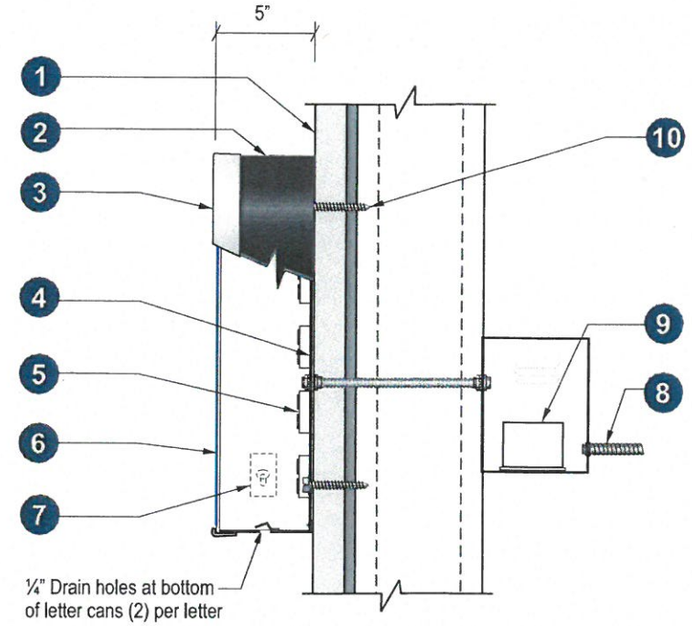

Section @ LED Channel Letter

Front-Lit (Remote)

Scale: N.T.S.

AspenDental

Client:	Aspen Dental
Site #:	AN-A21793
Address:	8750 Highway 51
	Millington, TN 38053
	Millington Farms

REVISION INFO		
03/25/2016	Variance Rendering	GC
03/28/2016	Added Additional Awnings to Side Elevation	SD
06/16/2016	Updated for Permitting	SD

This rendering is the property of Anchor Sign, Inc. It is for the exclusive use of Anchor Sign, Inc. and the party which requested the rendering. It is an unpublished original drawing not to be distributed, reproduced or exhibited without the consent of Anchor Sign, Inc. Please contact your account manager with questions regarding this statement.

AnchorSign
1.800.213.3331

Awnings B	Stapled to Frame Awning
Type:	54" Shed Style
Illumination:	Non-Illuminated
To Grade:	Bottom of Awning to Grade = 8'-5 1/2"

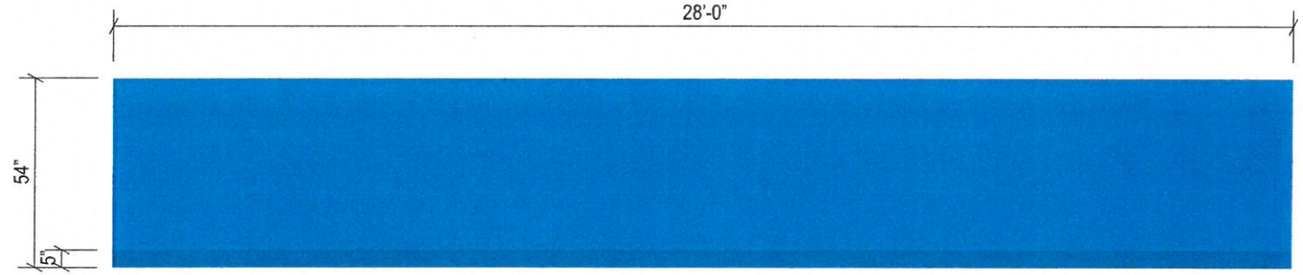

B1

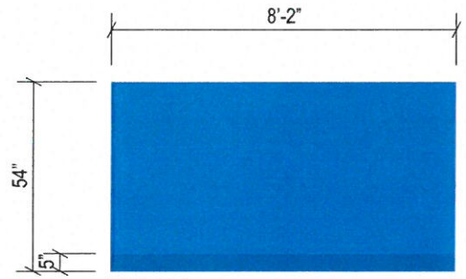

B2-B4

Awning Layout Details

Scale: 1/4" = 1'-0"

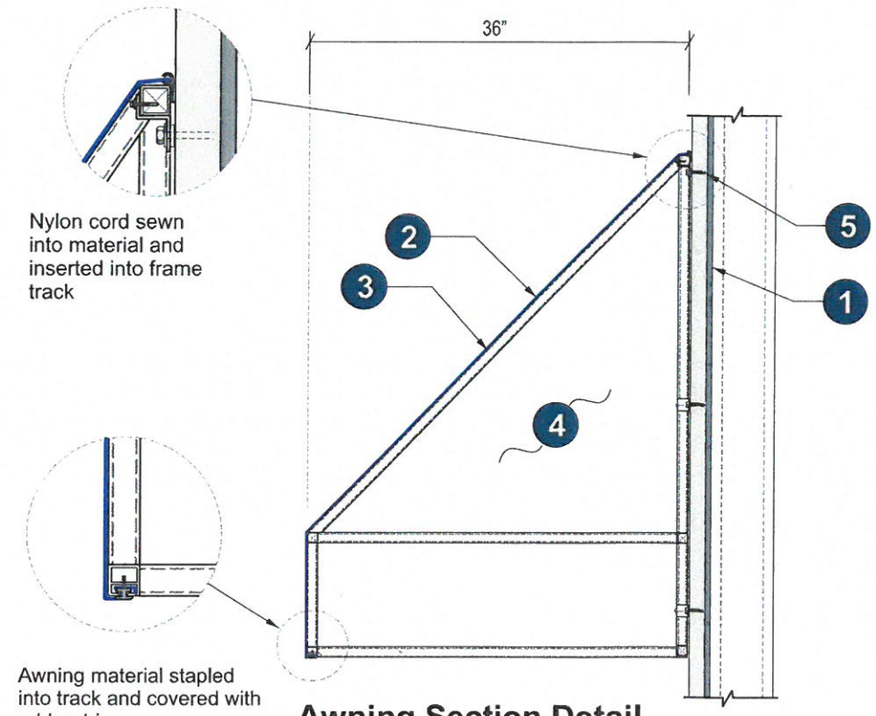

Awning Section Detail

Scale : N.T.S.

Typical Support Detail:

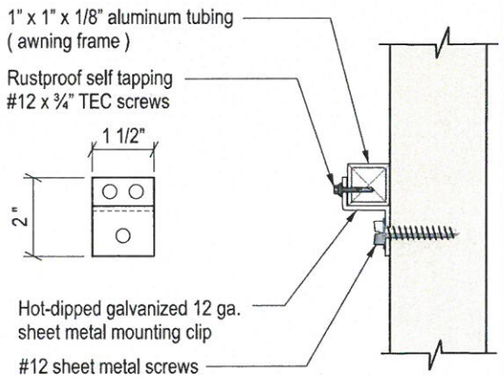

Specifications:

1. Existing Facade: EIFS/Plywood/Metal Studs
2. Awning Material: Weathermax FR 80 Pacific Blue (Fire Retardant)
3. 1" x 1" x 0.125" Aluminum square tubing frame painted to match mullions (wire brush all welds)
4. Closed End & Open Bottom
5. #12 Sheet metal screws

AspenDental

Client:	Aspen Dental
Site #:	AN-A21793
Address:	8750 Highway 51
	Millington, TN 38053
	Millington Farms

REVISION INFO			
	03/25/2016	Variance Rendering	GC
	03/28/2016	Added Additional Awnings to Side Elevation	SD
	06/16/2016	Updated for Permitting	SD

This rendering is the property of Anchor Sign, Inc. It is for the exclusive use of Anchor Sign, Inc. and the party which requested the rendering. It is an unpublished original drawing not to be distributed, reproduced or exhibited without the consent of Anchor Sign, Inc. Please contact your account manager with questions regarding this statement.

AnchorSign
1.800.213.3331

Awning C	Stapled to Frame Awning
Type:	54" Shed Style
Illumination:	Non-Illuminated
To Grade:	Bottom of Awning to Grade = 7'-4 1/2"

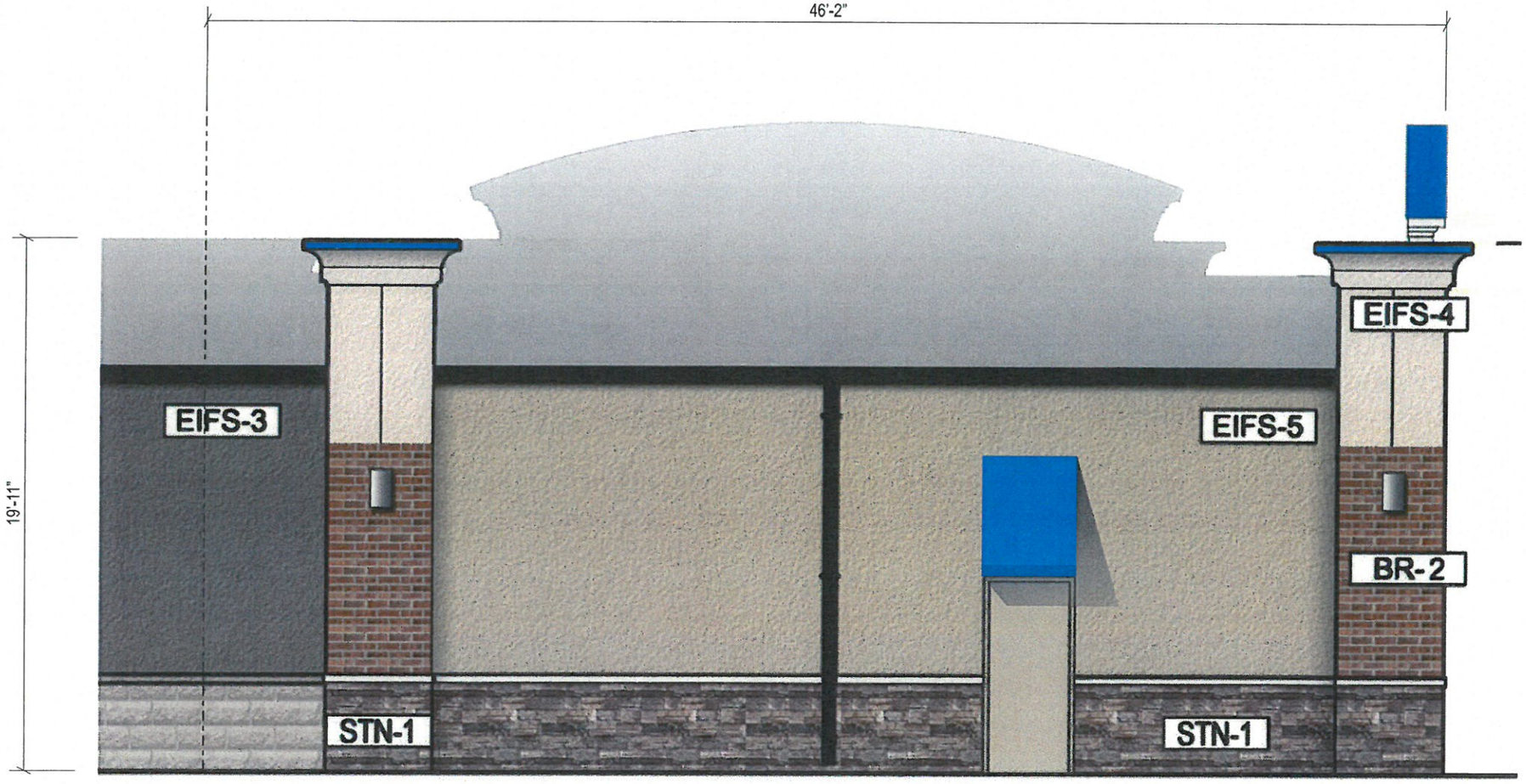

Rear Elevation (Southeast)

Scale: 3/16" = 1'-0"

AspenDental

Client:	Aspen Dental
Site #:	AN-A21793
Address:	8750 Highway 51
	Millington, TN 38053
	Millington Farms

REVISION INFO

03/25/2016	Variance Rendering	GC
03/28/2016	Added Additional Awnings to Side Elevation	SD
06/16/2016	Updated for Permitting	SD

This rendering is the property of Anchor Sign, Inc. It is for the exclusive use of Anchor Sign, Inc. and the party which requested the rendering. It is an unpublished original drawing not to be distributed, reproduced or exhibited without the consent of Anchor Sign, Inc. Please contact your account manager with questions regarding this statement.

AnchorSign
1.800.213.3331

Awning C	Stapled to Frame Awning
Type:	54" Shed Style
Illumination:	Non-Illuminated
To Grade:	Bottom of Awning to Grade = 7'-4 1/2"

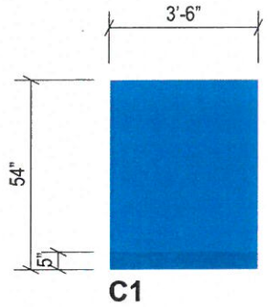

Awning Layout Details

Scale: 1/4" = 1'-0"

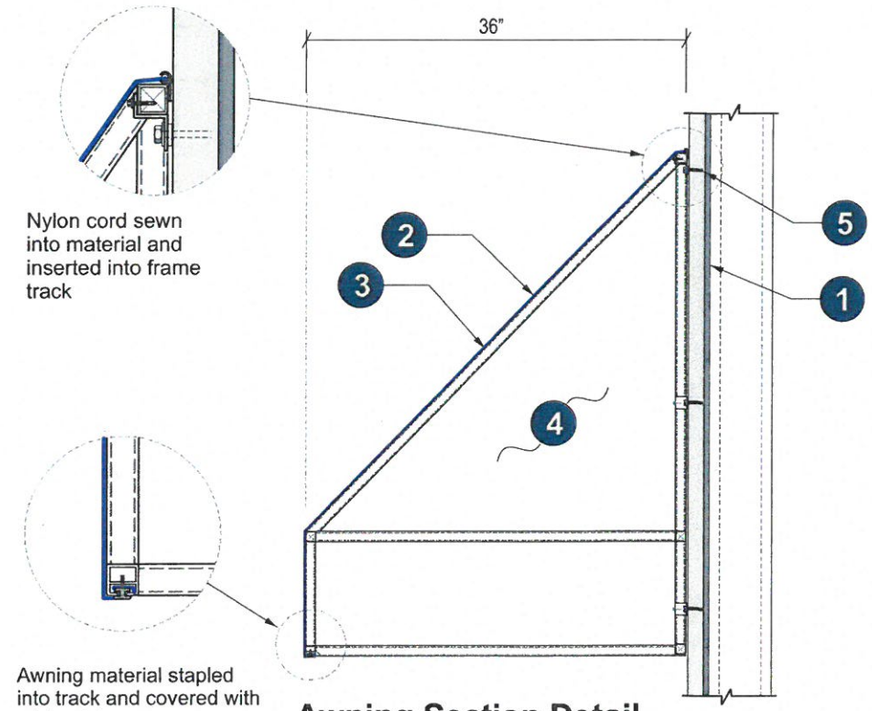

Awning Section Detail

Scale : N.T.S.

Typical Support Detail:

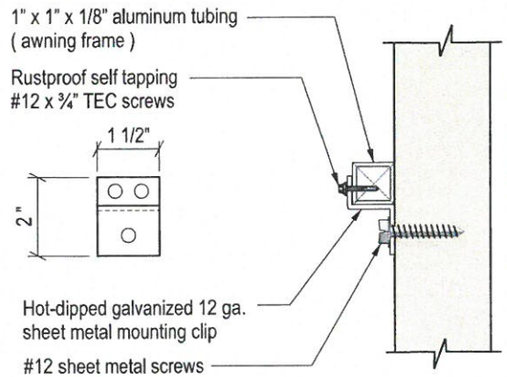

Specifications:

1. Existing Facade: EIFS/Plywood/Metal Studs
2. Awning Material: Weathermax FR 80 Pacific Blue (Fire Retardant)
3. 1" x 1" x 0.125" Aluminum square tubing frame painted to match mullions (wire brush all welds)
4. Closed End & Open Bottom
5. #12 Sheet metal screws

AspenDental

Client:	Aspen Dental
Site #:	AN-A21793
Address:	8750 Highway 51
	Millington, TN 38053
	Millington Farms

REVISION INFO

03/25/2016	Variance Rendering	GC
03/28/2016	Added Additional Awnings to Side Elevation	SD
06/16/2016	Updated for Permitting	SD

This rendering is the property of Anchor Sign, Inc. It is for the exclusive use of Anchor Sign, Inc. and the party which requested the rendering. It is an unpublished original drawing not to be distributed, reproduced or exhibited without the consent of Anchor Sign, Inc. Please contact your account manager with questions regarding this statement.

AnchorSign
1.800.213.3331

AspenDental

Millington Farms

SIGN A	36" Aspen Dental
Type:	Individual Channel Letters
Illumination:	Internally Illuminated LED
Square Footage:	67.99
To Grade:	Top of sign to grade = 18'-10 3/4" Bottom of sign to grade = 15'- 4 1/4"

Awnings A	Stapled to Frame Awning
Type:	54" Shed Style
Illumination:	Non-Illuminated
To Grade:	Bottom of Awning to Grade = 8'-5 1/2"

SIGN B	36" Aspen Dental
Type:	Individual Channel Letters
Illumination:	Internally Illuminated LED
Square Footage:	67.99
To Grade:	Top of sign to grade = 18'-10" Bottom of sign to grade = 15'-3 1/2"

Awnings B	Stapled to Frame Awning
Type:	54" Shed Style
Illumination:	Non-Illuminated
To Grade:	Bottom of Awning to Grade = 8'-5 1/2"

Awning C	Stapled to Frame Awning
Type:	54" Shed Style
Illumination:	Non-Illuminated
To Grade:	Bottom of Awning to Grade = 7'-4 1/2"

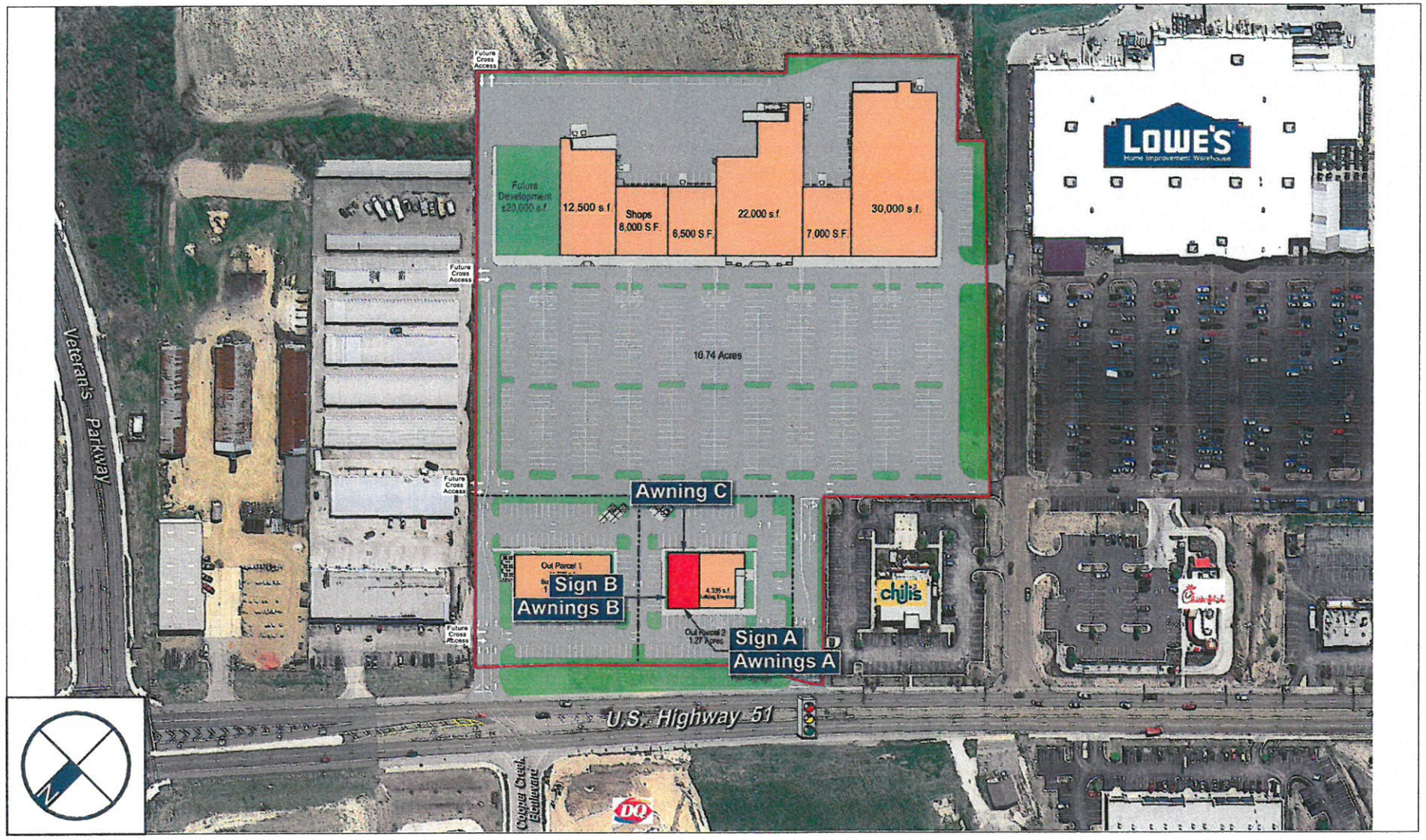

AspenDental

Client: Aspen Dental
Site #: AN-A21793
Address: 8750 Highway 51
Millington, TN 38053
Millington Farms

REVISION INFO			
03/25/2016	Variance Rendering	GC
03/28/2016	Added Additional Awnings to Side Elevation	SD
06/16/2016	Updated for Permitting	SD

This rendering is the property of Anchor Sign, Inc. It is for the exclusive use of Anchor Sign, Inc. and the party which requested the rendering. It is an unpublished original drawing not to be distributed, reproduced or exhibited without the consent of Anchor Sign, Inc. Please contact your account manager with questions regarding this statement.

AnchorSign
1.800.213.3331